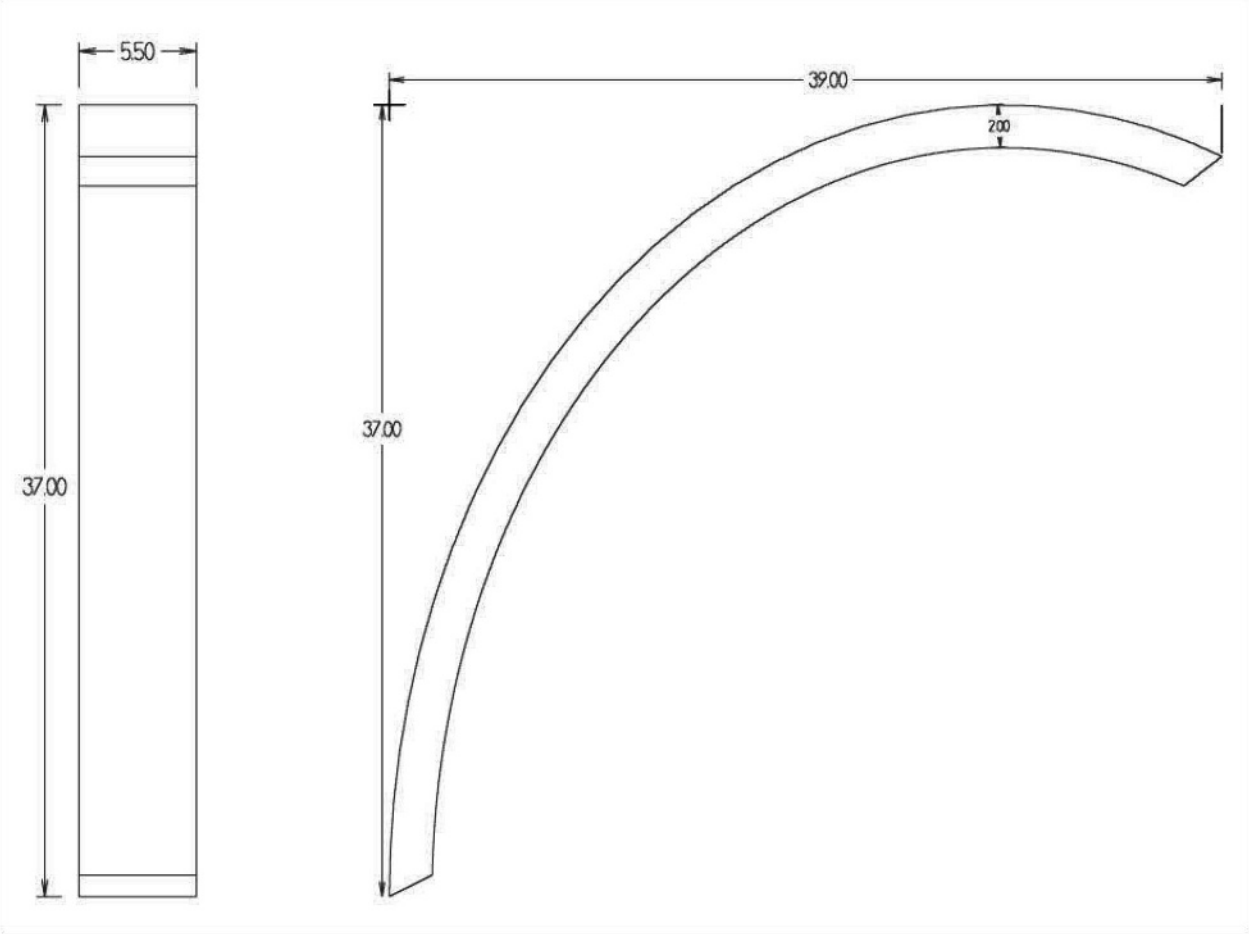

Prestige diY PRODUCTS
Innovative PVC Systems

	CUSTOMER APPROVAL	GBP2520	
	DATE June 29, 2018	Drawn by: HM	Scale: Not to scale
		Material: PVC	Texture: Smooth