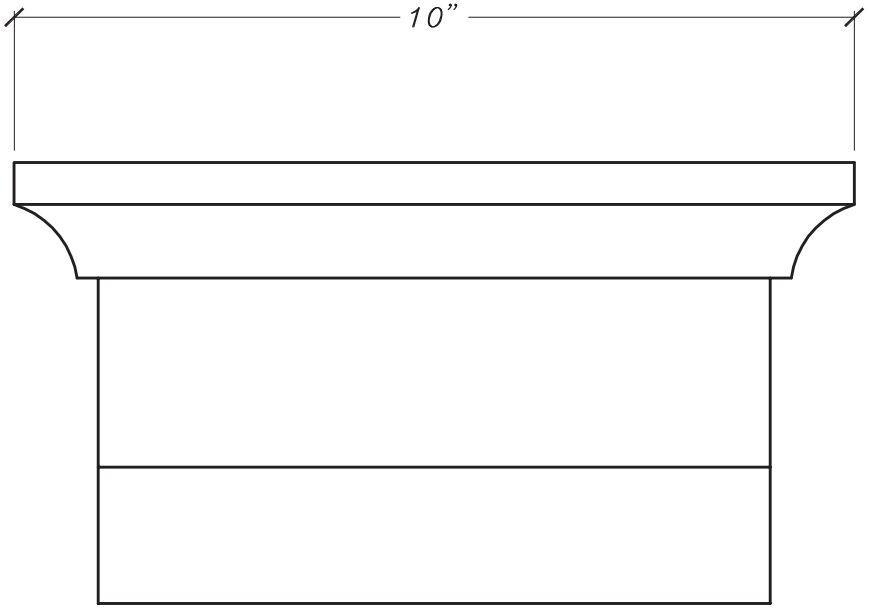

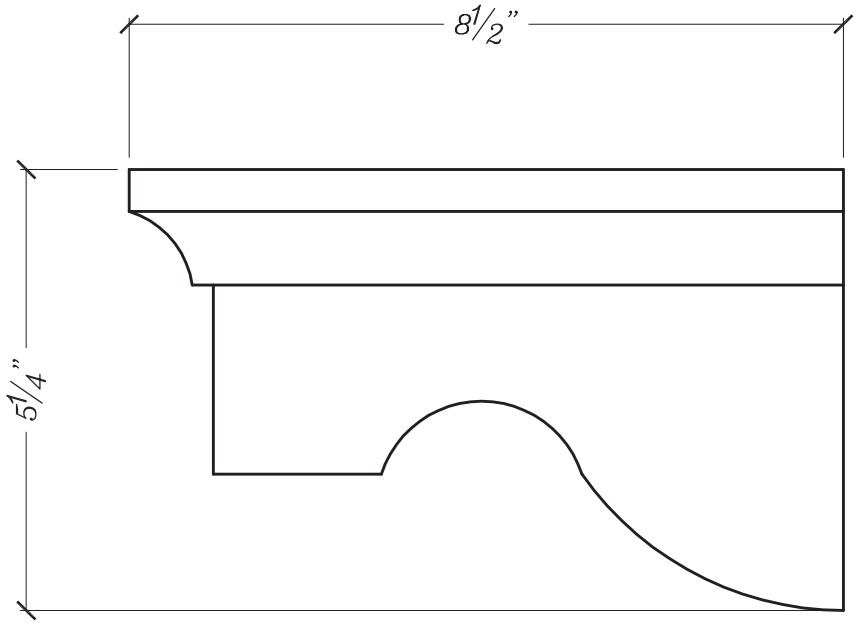

DECOR INNOVATIONS
DISTINCTIVE RAIL
DISTINCTIVE • INNOVATIVE • SOLUTIONS

CUSTOMER/PRO. NAME & QUOTE#: STANDARD PRODUCT	TITLE: BLOCK	
BILL OF MAT / PART #: BL 2486	SCALE: 7/16” = 1”	DATE: 05/01/04
	DWG BY: JB	REV